REV.	ECN.NO.	DATE

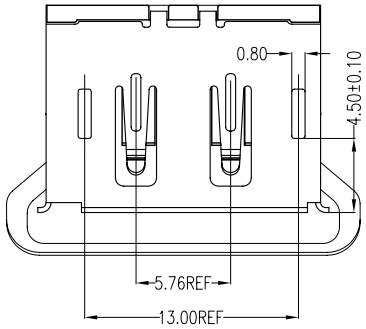

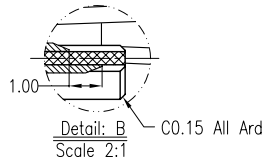

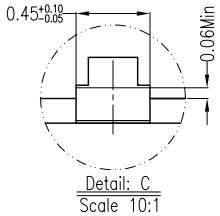

Pin No.	Signal Type	Pin No.	Signal Type
1	In	11	GND
2	GND	12	In
3	In	13	CONFIG(see note 1)
4	In	14	CONFIG(see note 1)
5	GND	15	I/O
6	In	16	GND
7	In	17	I/O
8	GND	18	Out
9	In	19	RTN
10	In	20	Power Out(see note 2)

NOTES:

*Material

Body: LCP, UL 94V-0 Rated; Color: Black.
Shield: Brass.
Plating: Nickle Plating .
Contact: Brass.
Plating: Tin Plating On Solder Tail.
Gold Plating Over Nickel on Contact Area;

*Electrical Specification

Operation Voltage: 40 VAC max.
Current Rating: 0.5 Ampere per contact
Contact Resistance: 30 Milliohms max.
Insulation Resistance: 100 Megohms min.
Dielectric Withstanding Voltage: 500 VAC

*Environmental

Operating Temperature: -20°C to +85°C

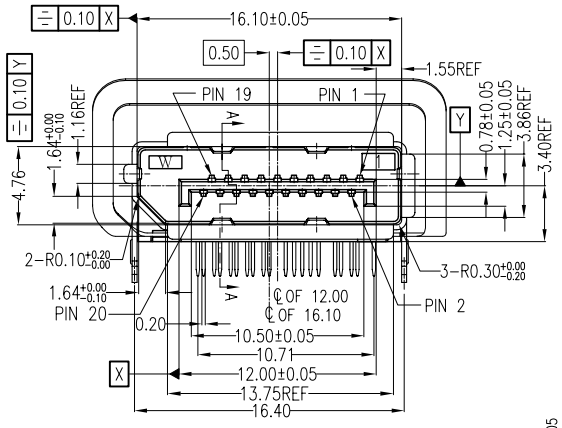

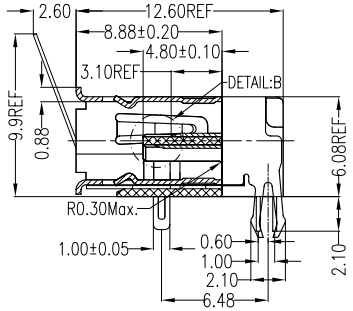

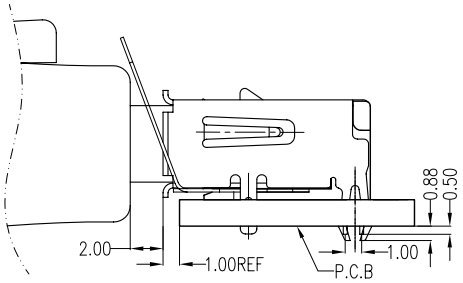

Fully mated condition

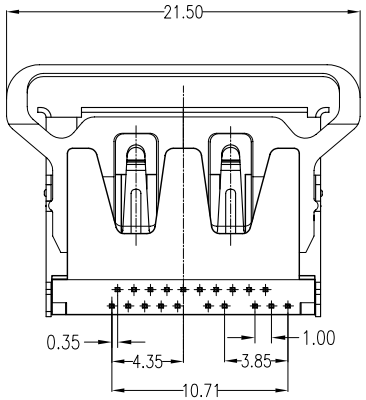

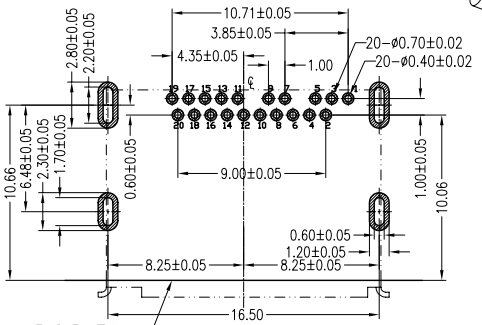

P.C.B Layout
T=1.60±0.15mm(TOP View)

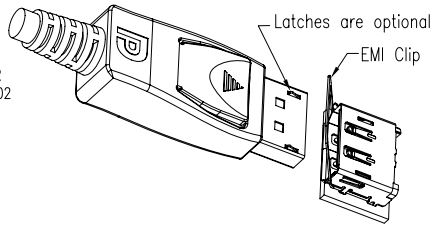

Cable 3D

*How To Order

WDPE-20 F 5 L 1 B C U 3

- Series NO.
- Number of Contacts
- Gold A:Flash D:15u" F:30u"
- 5: DIP Type(Two Row)
- L: LCP
- 1:Black
- B:Brass
- C:With EMI Clip
- U:Lead Free
- Blank: No Mark
- 3:Tray

REV					
Units	mm	Scale	1:1	Drawing By	Data
Tolerance Unless Otherwise Specified				Reviewed By	Data
.X	~	±0.38		Approval By	Data
.XX	~	±0.25			
.XXX	~	±0.20			
Angle	~	± 3°			

Wellco T&C Co., Ltd.

Date		Title	DisplayPort External DIP Type Male Double Row Connector(With EMI Clip)
Sheet	1 of 1		
Third Angle Projection		Drawing No.	REV